Solar Hot Water Version 2

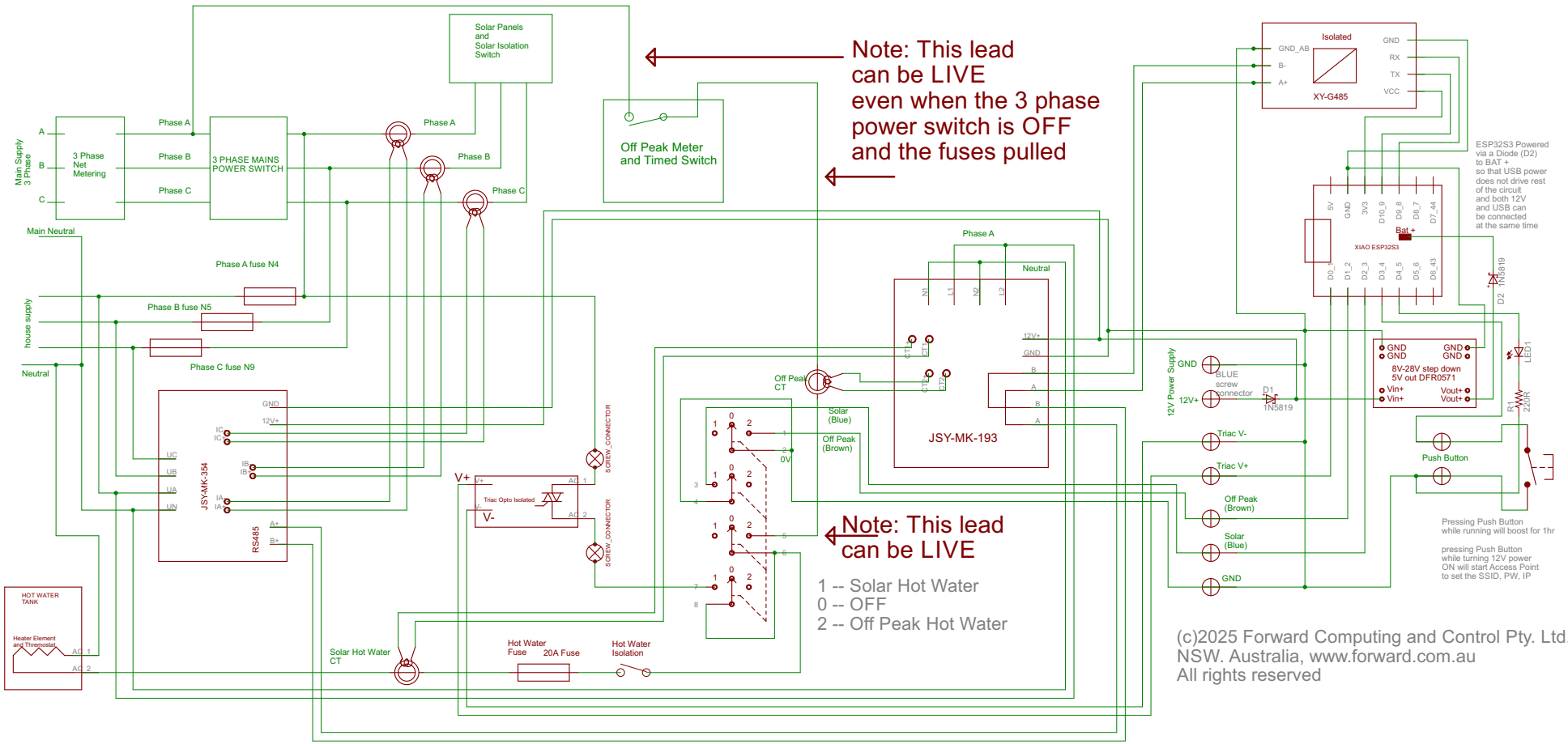

(c)2025 Forward Computing and Control Pty. Ltd.
NSW. Australia, www.forward.com.au
All rights reserved