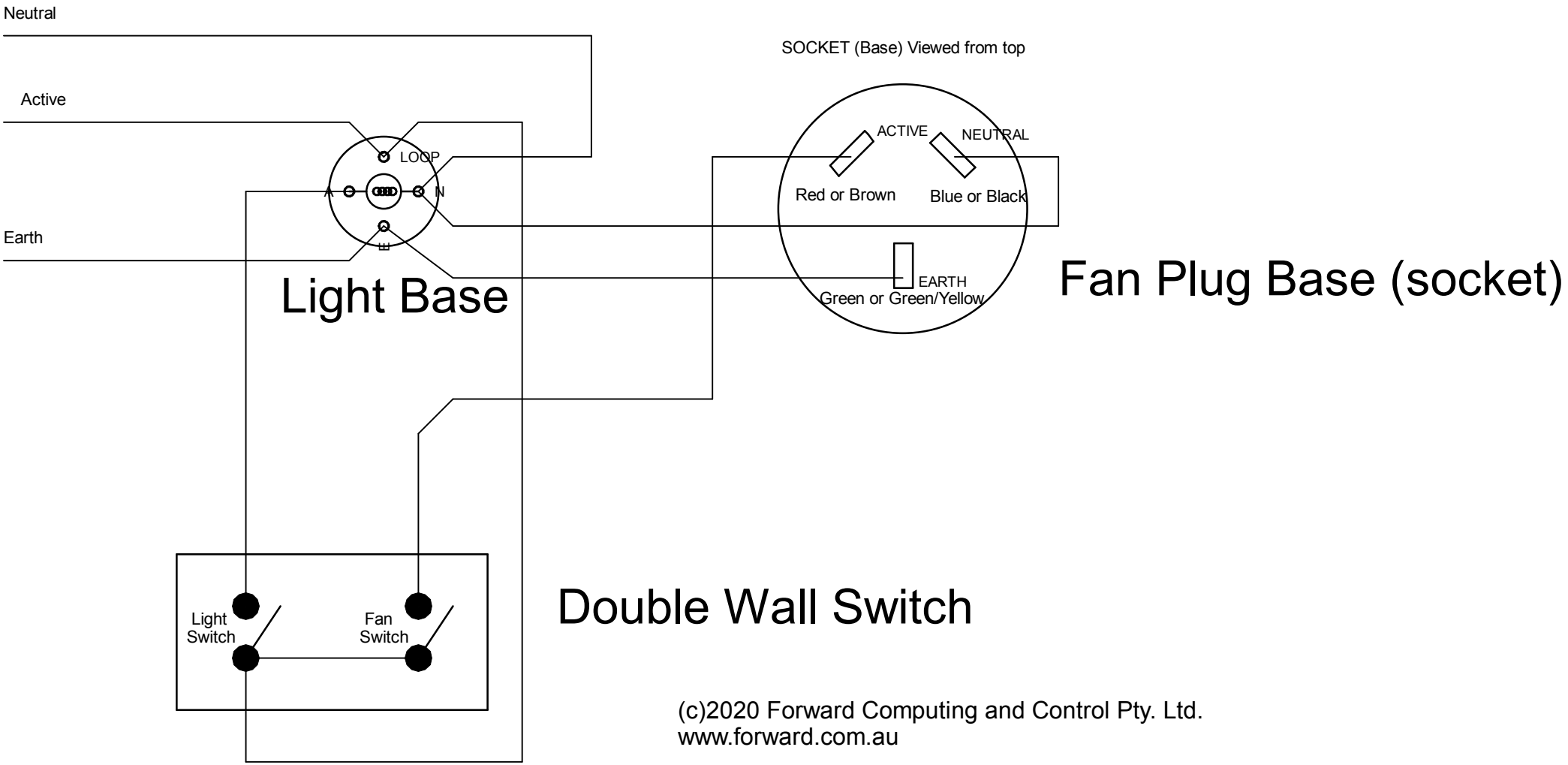

(c)2020 Forward Computing and Control Pty. Ltd.
www.forward.com.au