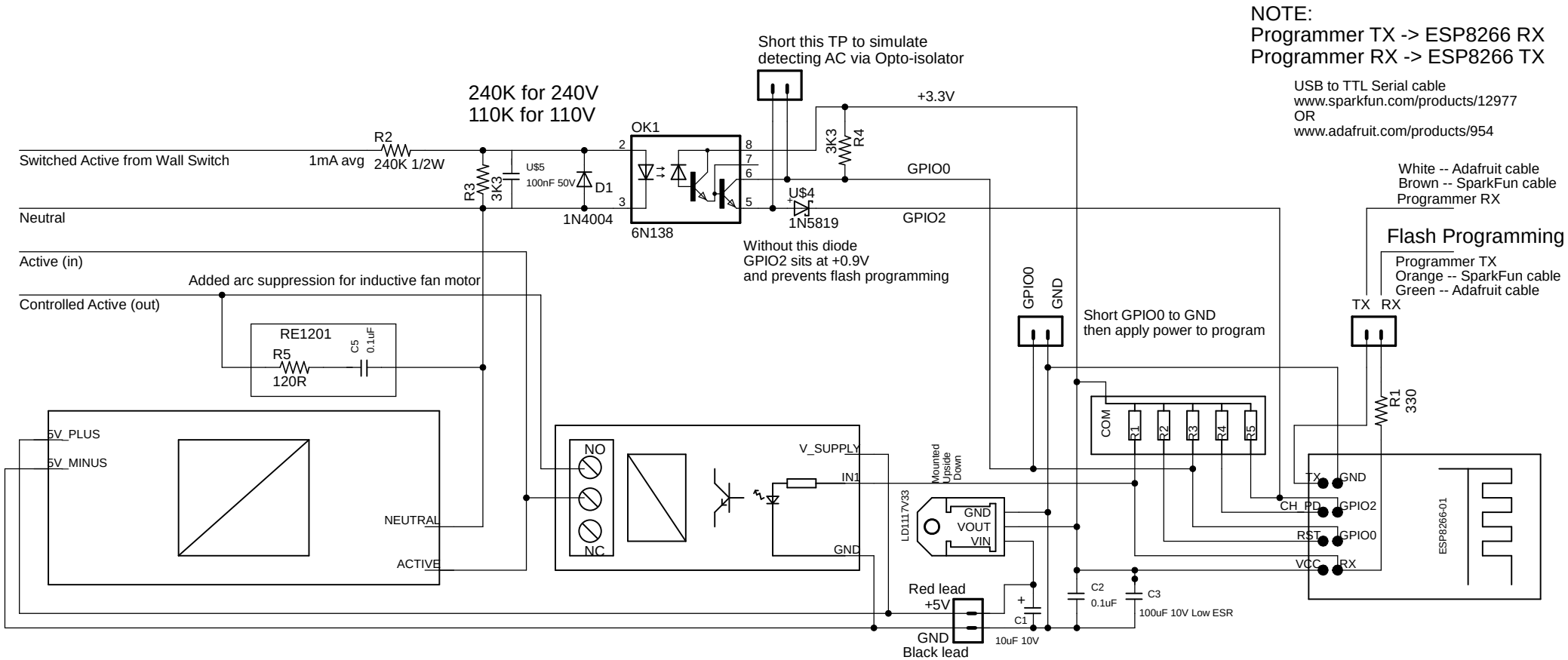
NOTE:
Programmer TX -> ESP8266 RX
Programmer RX -> ESP8266 TX
USB to TTL Serial cable
www.sparkfun.com/products/12977
OR
www.adafruit.com/products/954
Short this TP to simulate
detecting AC via Opto-isolator
240K for 240V
110K for 110V
+3.3V
OK1
R2
240K 1/2W
1mA avg
Switched Active from Wall Switch
R3
3K3
U$5
100nF 50V
D1
1N4004
6N138
3K3
R4
GPIO0
U$4
1N5819
GPIO2
Neutral
Active (in)
Added arc suppression for inductive fan motor
Controlled Active (out)
Without this diode
GPIO2 sits at +0.9V
and prevents flash programming
White -- Adafruit cable
Brown -- SparkFun cable
Programmer RX
Flash Programming
Programmer TX
Orange -- SparkFun cable
Green -- Adafruit cable
TX RX
GPIO0
GND
Short GPIO0 to GND
then apply power to program
RE1201
R5
120R
C5
0.1uF
5V_PLUS
5V_MINUS
NEUTRAL
ACTIVE
NO
NC
V_SUPPLY
IN1
GND
Mounted
Upside
Down
LD1117V33
GND
VOUT
VIN
COM
R1
R2
R3
R4
R5
R1
330
TX
GND
CH_PD
GPIO2
RST
GPIO0
VCC
RX
ESP8266-01
Red lead
+5V
GND
Black lead
C1
10uF 10V
C2
0.1uF
C3
100uF 10V Low ESR